IMU388

High Performance Inertial Measurement Unit

Main Features

- High Precision Tactical 6DoF MEMS IMU Sensor
- Range (Typical) : Gyro ±500° /s, Accel ±40g
- Bias Instability (Allan): Gyro: 0.6°/h, Accel 30μg
- Bias Repeatability: Gyro: 1.8° /h, Accel 100μg
- Strict Factory Calibration, Full Temp. Compensation
- High Bandwidth (Typical): 200Hz, RS422 Interface
- Proven Reliability, Dependability and Ruggedness
- Compact Size: 33.5×25.5×15 mm
- Working Temperature: -40~+85°C

IMU388 is a high-performance tactical grade MEMS Inertial Measurement Unit, which enjoys high accuracy: MEMS gyroscope is 0.6° /h bias instability (Allan) and MEMS accelerometer is 30μg bias instability (Allan), and its MEMS gyroscope range can be optional in ±250° /s~ ±4000° /s, the accelerometer range is ±40g, and it can output precise 3-axis outputs of angular rate and 3-axis acceleration data.

IMU388 adopts latest MEMS technology and advanced MEMS components, and it has been produced in bulk, which reduces the cost deeply. IMU388 can output precise measurement data in harsh environment, and it has been widely applied in airborne optoelectronic pod, target drone, armored personnel carrier, rain-seeding rocket, platform stabilization, industrial robotics, etc., and IMU388 is easily integrated into the variety of architectures that these applications present. The extremely small size, light weight, and low power make the IMU388 ideal for most applications.

- ✓ **12-Step Quality Control, Super Reliability, Suitable for Applications in Harsh Environment**
- ✓ **Adopting Original Big Brand Component, High-class Material, Competitive Price**
- ✓ **Real Actual Precise with Strict Factory Calibration, Perfect Performance**
- ✓ **Successful Applications in Tens of Fields, More than 1000 Customers are Using**

Typical Applications

Airborne Optoelectronic Pod

Target Drone

Armored Personnel Carrier

Rain-Seeding Rocket

www.SkyMEMS.com Mobile: +86 133 7203 8516
Skype: skymems

Copy Right Reserved © 2024 Nanjing Sky MEMS Technology co., ltd.
Focus on MEMS Measurement & Control Technologies, Products include:
MEMS Accelerometer MEMS Gyro Inclinometer E-compass
IMU Vertical Gyro AHRS GNSS/INS Fiber Optical Gyro

IMU388

High Performance Inertial Measurement Unit

Technical Specifications

Parameter	Test Condition	Min.	Typical	Max.	Unit
Gyroscopes					
Range①			±500		°/s
Bias Instability	Allan variance		0.6		°/h
	10s average(-40~+85°C, fixed temp.)		2		°/h
Bias Repeatability			1.8		°/h
Random Walk			0.1		°/√h
Bais	Bias change at full temp. range②		±0.04		°/s
	Bias change in vibration conditions③		6		°/h
Non-linearity			100		ppm
Bandwidth			200		Hz
Accelerometers					
Range①			±40		g
Bias Instability	Allan variance		50		ug
	10s average(-40~+85°C, fixed temp.)		100		ug
Bias Repeatability			100		ug
Random Walk			0.01		m/s/√h
Non-linearity			100		ppm
Bandwidth			200		Hz
Interface④(RS422)					
Baud Rate		115200	230400	921600	bps
Output Rate		250	500	2000	Hz
Reliability					
MTBF	20000 h				
Continuous Working Time	120 h				
Electrical Features					
Supply Voltage	3.6 ~ 36 V				
Power Consumption	< 0.2W				
Ripple Wave	100mV (P-P)				
Environment Conditions					
Operating Temperature	-40°C ~ 85°C				
Storage Temperature	-55°C ~ 105°C				
Vibration Resistance	20-2000Hz, 6.06g				
Shock Resistance	1000g, 0.5ms				

Copy Right Reserved © 2024 Nanjing Sky MEMS Technology co., ltd.
Focus on MEMS Measurement & Control Technologies, Products include:
MEMS Accelerometer MEMS Gyro Inclinometer E-compass
IMU Vertical Gyro AHRS GNSS/INS Fiber Optical Gyro

IMU388

High Performance Inertial Measurement Unit

Technical Specifications

Parameter	Test Condition	Min.	Typical	Max.	Unit
Physical Parameter					
Size	33.5 × 25.5 × 15 mm				
Weight	30grams				
Connector	9pins J63A				

Note:

①: The range of Gyroscopes and Accelerometers can be configured in our factory.

②: The bias value is calculated based on the whole temperature change period, the temperature changing rate<=2°C/minute, temperature range:-40~+85°C;

③: (before vibration average value +after vibration average value) /2-during vibration average value, the vibration conditions are 6.06g, 20~2000Hz

④: The baud rate and output rate can be configured in our factory.

Copy Right Reserved © 2024 Nanjing Sky MEMS Technology co., ltd.
Focus on MEMS Measurement & Control Technologies, Products include:
MEMS Accelerometer MEMS Gyro Inclinometer E-compass
IMU Vertical Gyro AHRS GNSS/INS Fiber Optical Gyro

IMU388

High Performance Inertial Measurement Unit

Pins Definition

Pins No.	Name	Type	Description
1	RS422_Rx+	Input+	RS422 Interface
2	RS422_Rx-	Input-	
3	RS422_Tx+	Output+	
4	RS422_Tx-	Output-	
5	GND	Power GND	
6	DRDY	Data Ready	
7	SYNC	Sync Input	
8	NC	NC	
9	VIN	Power Supply Input	

Copy Right Reserved © 2024 Nanjing Sky MEMS Technology co., ltd.
Focus on MEMS Measurement & Control Technologies, Products include:
MEMS Accelerometer MEMS Gyro Inclinometer E-compass
IMU Vertical Gyro AHRS GNSS/INS Fiber Optical Gyro

IMU388

High Performance Inertial Measurement Unit

Dimension & Package

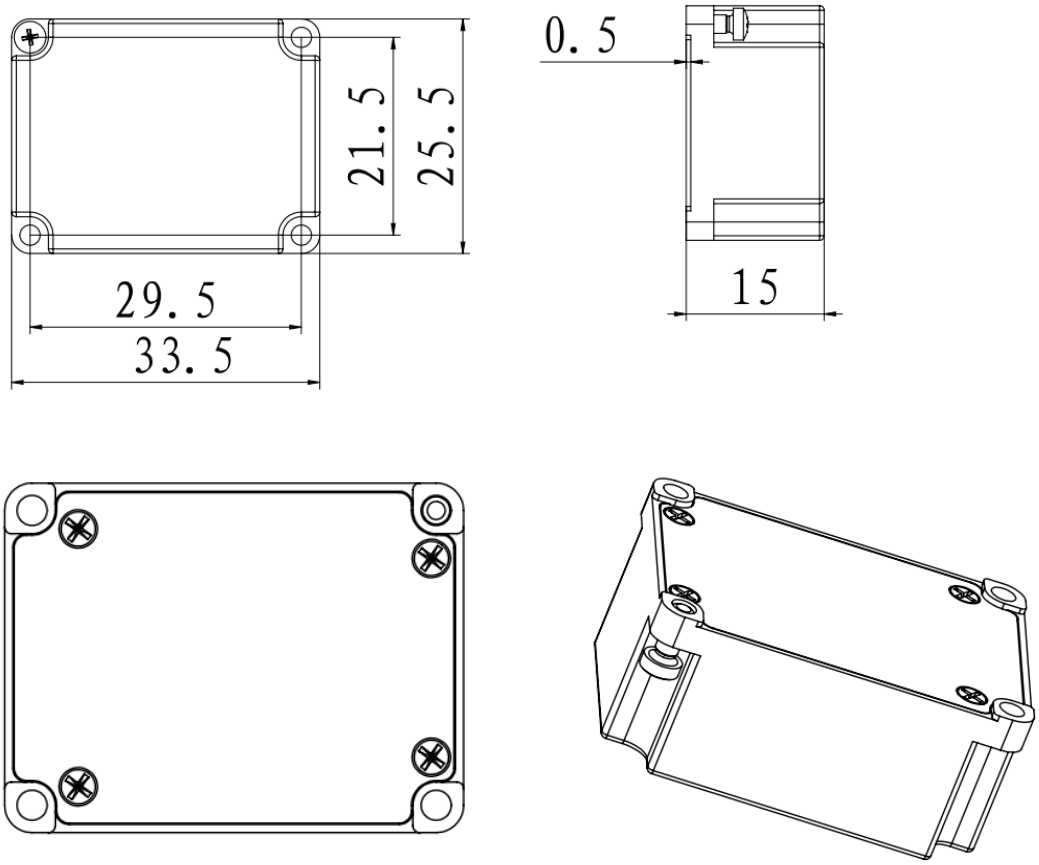

Three-view Drawing of IMU388

Copy Right Reserved © 2024 Nanjing Sky MEMS Technology co., ltd.
Focus on MEMS Measurement & Control Technologies, Products include:
MEMS Accelerometer MEMS Gyro Inclinometer E-compass
IMU Vertical Gyro AHRS GNSS/INS Fiber Optical Gyro

IMU388

High Performance Inertial Measurement Unit

Coordinate System Definition

The coordinate system of 3 gyroscopes (g_x,g_y,g_z) and 3 accelerometers (a_x,a_y,a_z) are defined as the following figure, and the arrow direction is positive.

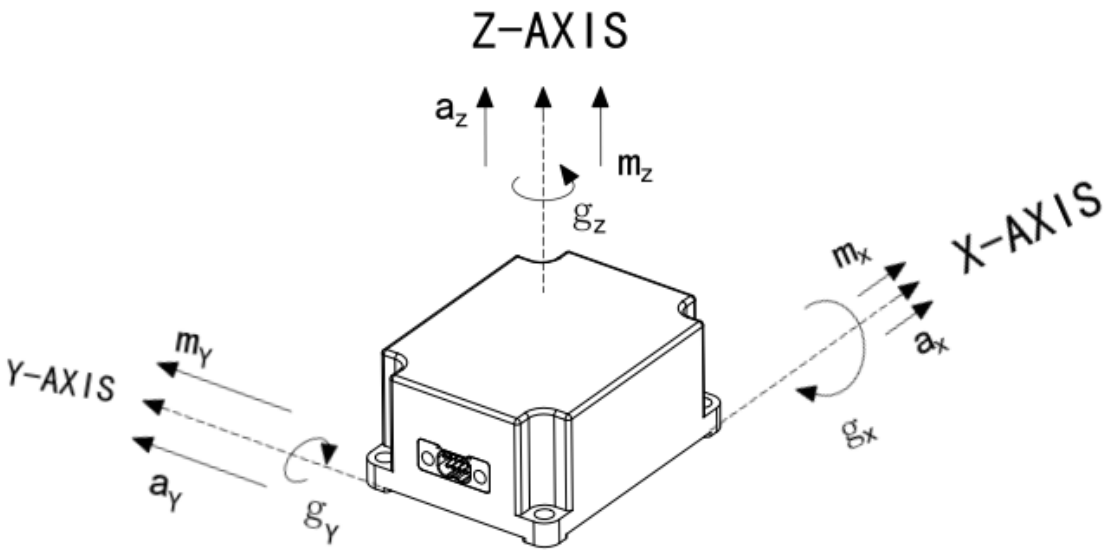

Copy Right Reserved © 2024 Nanjing Sky MEMS Technology co., ltd.
Focus on MEMS Measurement & Control Technologies, Products include:
MEMS Accelerometer MEMS Gyro Inclinometer E-compass
IMU Vertical Gyro AHRS GNSS/INS Fiber Optical Gyro

Communication Protocol – RS422

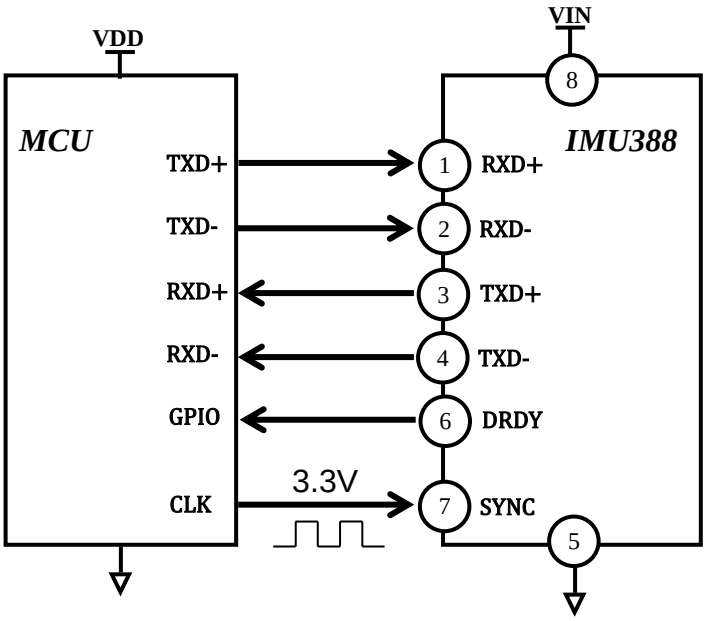

System connection diagram

Protocol Format

IMU388 will automatically start when there is a valid power supply. SYNC is a synchronous input pin that receives a 3.3V 50% duty cycle square wave signal input. The data acquisition of IMU388 is controlled by this pin. When this pin is on the rising edge, the IMU will start sampling, calibration processing, and outputs the calibrated sensor data through the RS422 interface. The output rate of the sensor is controlled by this signal. When SYNC does not provide synchronous signal input, IMU388 outputs at a predetermined fixed output frequency, with the same output protocol format. The upper computer and other embedded devices can be connected to IMU388 through RS422 to read the output data from the IMU sensor. In the factory default configuration, the DRDY pin provides a data ready signal; When new data is available in the output data register, the pin becomes high level and remains at least 10us.

Interface: RS422, 230400bps, 8-bit data bit, 1-bit stop bit, no parity check;

Protocol format: protocol header, protocol body, and protocol end.

Copy Right Reserved © 2024 Nanjing Sky MEMS Technology co., ltd.
Focus on MEMS Measurement & Control Technologies, Products include:
MEMS Accelerometer MEMS Gyro Inclinometer E-compass
IMU Vertical Gyro AHRS GNSS/INS Fiber Optical Gyro

Communication Protocol – RS422

Protocol	Byte No.	Data	Unit	Data Type	Remarks
Protocol head	1	0xaa			
Protocol Body	2~5	ID		UINT32	
	6~9	X axis gyro	°/s	float	
	10~13	Y axis gyro	°/s	float	
	14~17	Z axis gyro	°/s	float	
	18~21	X axis accelerometer	g	float	
	22~25	Y axis accelerometer	g	float	
	26~29	Z axis accelerometer	g	float	
	30~33	temperature	°C	float	
Protocol end	34	Checksum			Sum of 2 to 33 bytes, take the low byte

Copy Right Reserved © 2024 Nanjing Sky MEMS Technology co., ltd.
Focus on MEMS Measurement & Control Technologies, Products include:
MEMS Accelerometer MEMS Gyro Inclinometer E-compass
IMU Vertical Gyro AHRS GNSS/INS Fiber Optical Gyro

IMU388

High Performance Inertial Measurement Unit

Revision history

Data	Version	Changes
2024-12-4	V1.0	Initial release.

Copy Right Reserved © 2024 Nanjing Sky MEMS Technology co., ltd.
Focus on MEMS Measurement & Control Technologies, Products include:
MEMS Accelerometer MEMS Gyro Inclinometer E-compass
IMU Vertical Gyro AHRS GNSS/INS Fiber Optical Gyro